Adjustment column

New

CRG

For conveyor systems

- **Allows the positioning and adjustment of elements of a conveyor system**
- Millimetre scale
- Materials:
  Steel and duralumin AL5083
  Chromed exterior finish
  Machined elements
  Operating handle, upper and lower caps: thermoplastics
  Steel (F114) main screw guided by bearings



CRG-500-TL



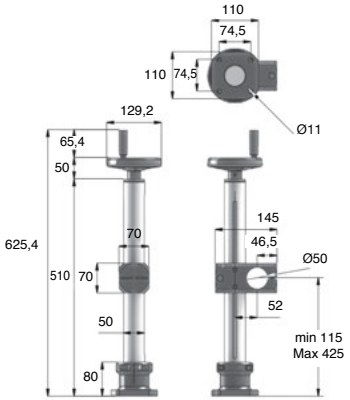
CRG-500-NC

Applications

- Machine heads, labelling machines, thermal printers, dosing and bottling machines, artificial vision, quality control...
- On the same conveyor system, it allows adjustments to be made when the dimensions of products or packages change.



Typical application: Adjustment of a labelling machine



DISCOUNTS

Qty	1+	2+	5+
Disc.	List	-5%	On request

Part number	Standard length	Component finish	Weight (kg)	Price each
CRG-500-NC	500	Nickel chrome	5,96	567,86 €
CRG-500-TL	500	Powder coated	5,96	527,71 €

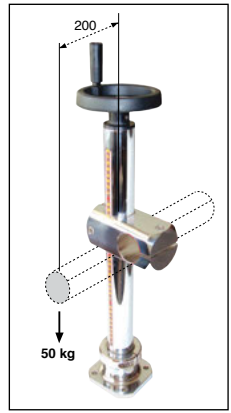
Dimensions in mm

New Adjustment column - components

For conveyor systems

CRG

- ***Individual components*** *for spares or ongoing modifications*





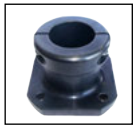
CRG-COL-500



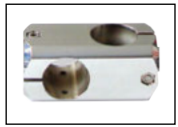
CRG-VOL



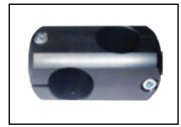
CRG-EMB-NC



CRG-EMB-TL



CRG-NR-NC



CRG-NR-TL

DISCOUNTS

Qty	1+	2+	5+
Disc.	List	-5%	On request

Part number	Type	Component finish	Weight (kg)	Price each
CRG-COL-500	500 mm column	Nickel chrome	3,72	357,14 €
CRG-VOL	Operating wheel	Thermoplastic	0,27	43,89 €
CRG-EMB-NC	Base	Nickel chrome	0,84	126,60 €
CRG-EMB-TL	Base	Powder coated	0,84	107,10 €
CRG-NR-NC	Clamp	Nickel chrome	1,13	121,44 €
CRG-NR-TL	Clamp	Powder coated	1,13	100,79 €

Dimensions in mm